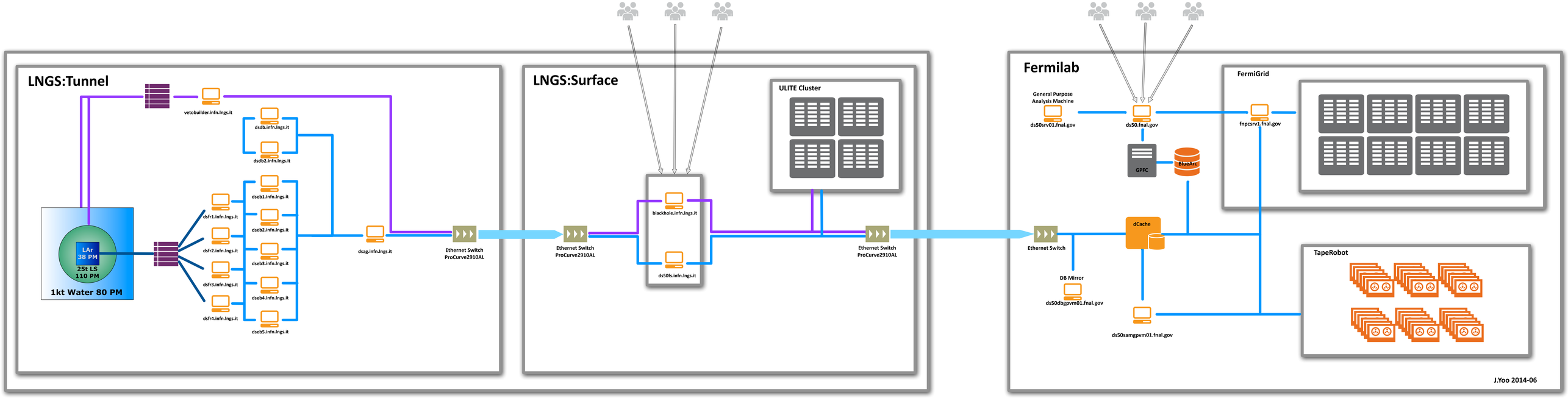
LNGS:Tunnel
vetobuilder.infn.lngs.it
dsdb.infn.lngs.it
dsdb2.infn.lngs.it
dseb1.infn.lngs.it
dsfr1.infn.lngs.it
dseb2.infn.lngs.it
dsfr2.infn.lngs.it
dseb3.infn.lngs.it
dsfr3.infn.lngs.it
dseb4.infn.lngs.it
dsfr4.infn.lngs.it
dseb5.infn.lngs.it
LAr
38 PM
25t LS
110 PM
1kt Water 80 PM
dsag.infn.lngs.it
Ethernet Switch
ProCurve2910AL
LNGS:Surface
Ethernet Switch
ProCurve2910AL
blackhole.infn.lngs.it
ds50fs.infn.lngs.it
ULITE Cluster
Ethernet Switch
ProCurve2910AL
Fermilab
General Purpose
Analysis Machine
ds50srv01.fnal.gov
ds50.fnal.gov
GPFC
BlueArc
FermiGrid
fnpcsrv1.fnal.gov
Ethernet Switch
dCache
DB Mirror
ds50dbgpvm01.fnal.gov
ds50samgpvm01.fnal.gov
TapeRobot
J.Yoo 2014-06